MD40-2-TRN-CB20-DC-XX-ST-(FINISH)

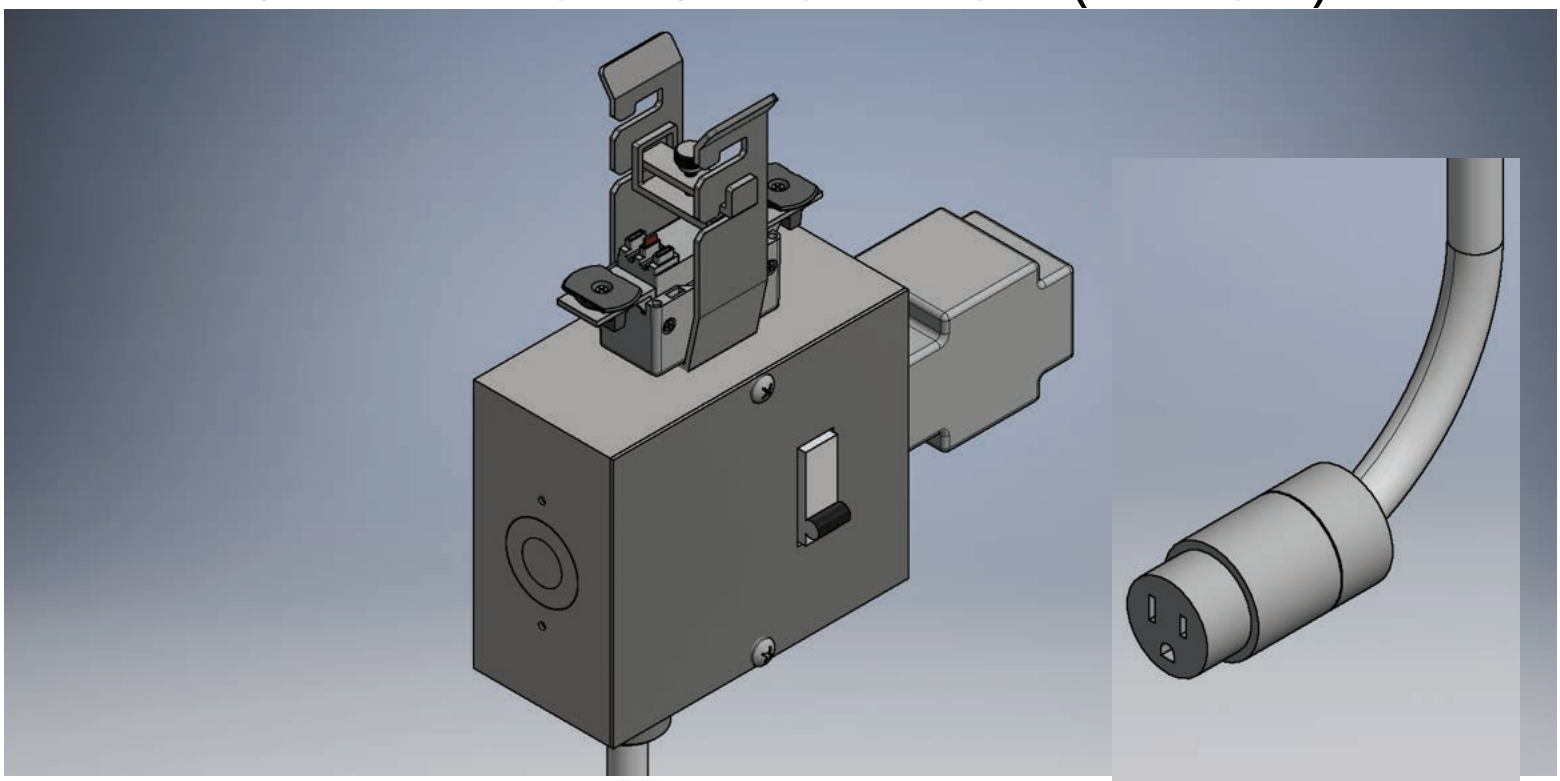

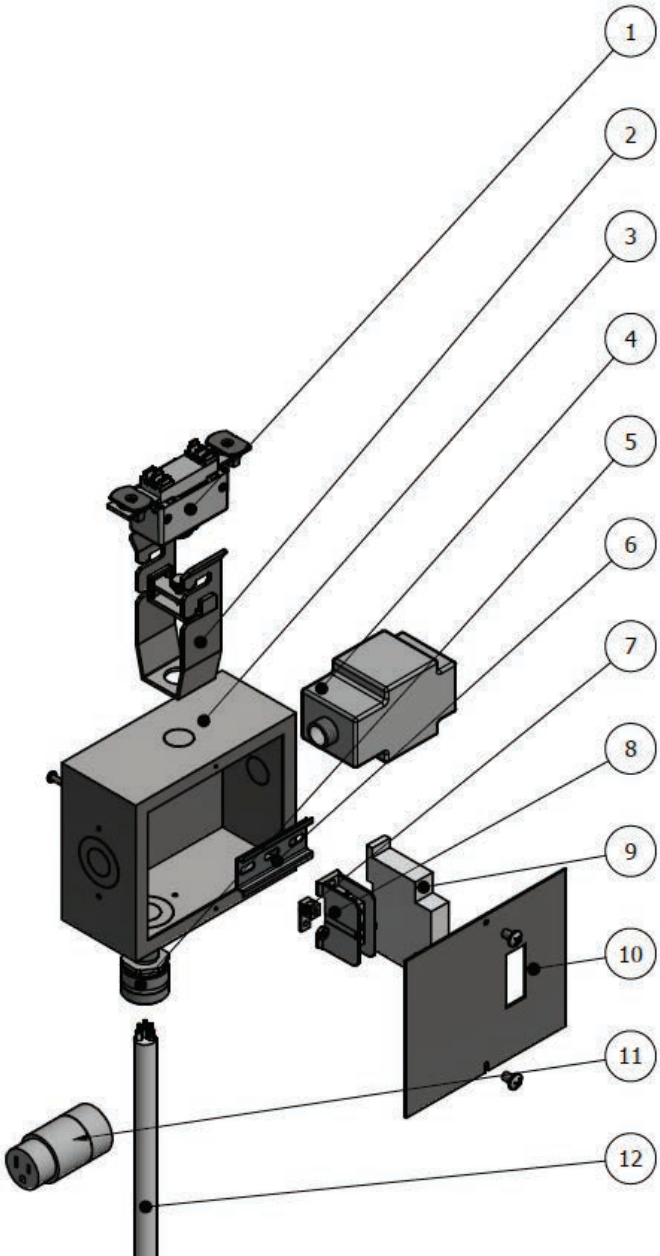

1 POWER DROP
2 277V TO 120V
3 20A
4 TRANSFORMER
5 SINGLE BREAKER
6 SINGLE TWIST LOCK RECEPTACLE